SLAMTEC

SLAMTEC Aurora

A New Era of Mapping and localization solution

Data Sheet

- More Stable
- More Accurate
- More Powerful

Shanghai Slamtec Co., Ltd

2024-09-28 V1.0

www.slamtec.com

Contents

Overview 4
Specification 7
Self-protection and Status Detection 10
SDK and support 11
Mechanical Dimensions 12
Product List 13
Quick Start 14
Revision History 19

Overview

Aurora is an innovative fusion of LIDAR, vision, inertial navigation, and deep learning technologies developed by SLAMTEC. It integrates advanced localization and mapping perception sensors, offering six-degrees-of-freedom localization for both indoor and outdoor 3D high-precision mapping systems, with no external dependencies required at startup. Additionally, Aurora comes with a comprehensive toolchain, including the graphical interface software RoboStudio and SDK toolkits for secondary development, enabling users to quickly create customized applications and accelerate product deployment. Key features of the product include:

- Fusion LIDAR+ binocular vision + IMU multi-source fusion algorithm, supporting external expansion (GPS/RTK, odometer, etc.)
- Provide indoor and outdoor 3D mapping and localization functions
- Integrating AI technology to enhance 3D perception capabilities
- With a complete toolchain, support for client-side application expansion
- Industry-leading system stability

Aurora System Composition

SLAMTEC Aurora products provide customers with 3D mapping and localization capabilities in an integrated form, consisting of LIDAR, binocular cameras, and inertial navigation. Aurora supports DC socket DC power supply. Users can obtain real-time maps and localization data generated by Aurora through WiFi signals, or achieve high-speed and stable data paths through Ethernet interfaces.

Working Principle and Use

SLAMTEC Aurora uses the unique SLAM algorithm of LIDAR-vision-IMU fusion from Slamtec. Combining visual and laser characteristics, it can perform map data fusion more than 10 times per second and draw up to one million square meters of map data. The system diagram is shown below. The output of the system can be defined as a toolchain for secondary development, including visual interaction tools Robostudio, C++ sdk, JAVA sdk, Restful API sdk, ROS sdk, etc.

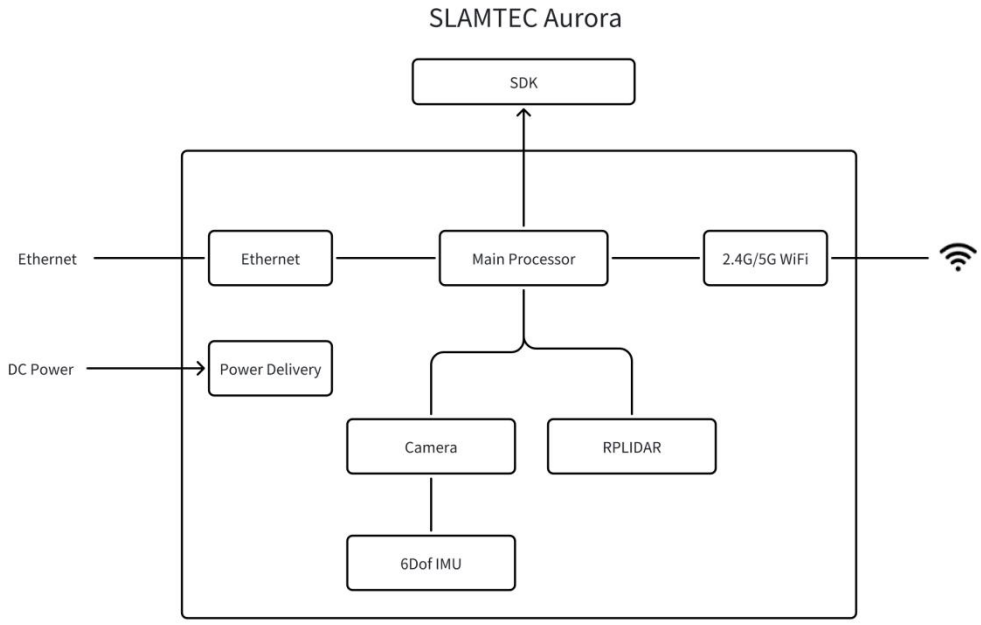

Safety and Scope

The SLAMTEC Aurora laser sensor uses a low-power infrared laser as the emitting light source and is driven by modulated pulses. The laser only emits for a very short period of time, ensuring safety for humans and pets and meeting Class I laser safety standards. The product complies with 21 CFR 1040.10 and 1040.11, except for deviations according to Laser Notice No. 50 of June 24, 2007.

Caution: Using controls, adjustments, or executing procedures other than those specified in this article may result in dangerous radiation exposure.

The modulated laser can effectively avoid the interference from ambient light and sunlight during ranging scanning process, which makes SLAMTEC Aurora work

excellent in all kinds of indoor environment and outdoor environment without direct sunlight.

Output Data

While operating the SLAMTEC Aurora, it integrates binocular vision, LIDAR, inertial navigation, and AI + SLAM algorithms to output real-time image data, LIDAR scan data, dynamically generated 2D grid maps, 3D point cloud data, real-time localization coordinates, and localization quality metrics. Using the SLAMWARE SDK or the ROS Node driver, relevant data can be accessed seamlessly.

Application Scenarios

This system is suitable for the following fields

- Environmental mapping
- Construction engineering
- Indoor and outdoor robot mapping and localization
- Humanoid robot, robot dog

Specification

- Overall specification

Item	Parameter
Power input	DC12V-2A (DC5.5x2.1mm)
Power	10W (typical)
Data interface	1 x USB-C 1X Ethernet (RJ45)
Wireless connection	WIFI
Weight	505g
Working temperature	0℃~40℃

- Core parameter

Item	Parameter
2D map resolution	2Cm/5cm/10cm adjustable
Maximum Mapping area	>1,000,000 ㎡
Relocation	Support global relocation
Map continuation	Support
Map loading and saving	Support
Map localization mode	Laser + vision+ inertial navigation multi-source fusion
Multi-sensor synchronization	Hardware time synchronization

mechanism	
LIDAR distance measurement	maximum range 40m@70% reflectivity
Camera specifications	Binocular fish eye global camera, supports HDR, FOV 180 °, 6cm base line
Camera frame rate	Typical 10Hz, 15/30Hz can be customized
Maximum tilt angle	No requirements, (to ensure the 2D drawing effect, it is recommended that the tilt angle does not exceed 30 °)

Scan data coordinate system definition

SLAMTEC Aurora adopts a coordinate system that follows the right-hand rule. The x-axis of the coordinate system is defined in front of the laser sensor, and the origin of the coordinate system is the rotation center of the ranging core. The specific definition of the coordinate system is shown in the following figure.

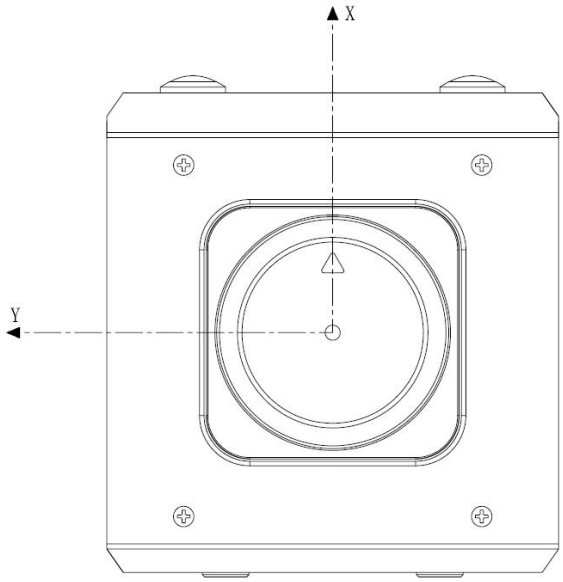

Communication and interface

SLAMTEC Aurora is powered by a separate 12V DC power supply. Through the simple Plug and Play function, users can connect it to mobile devices such as phones to create an integrated and portable measurement solution. The specific interface definition is shown in the figure below.

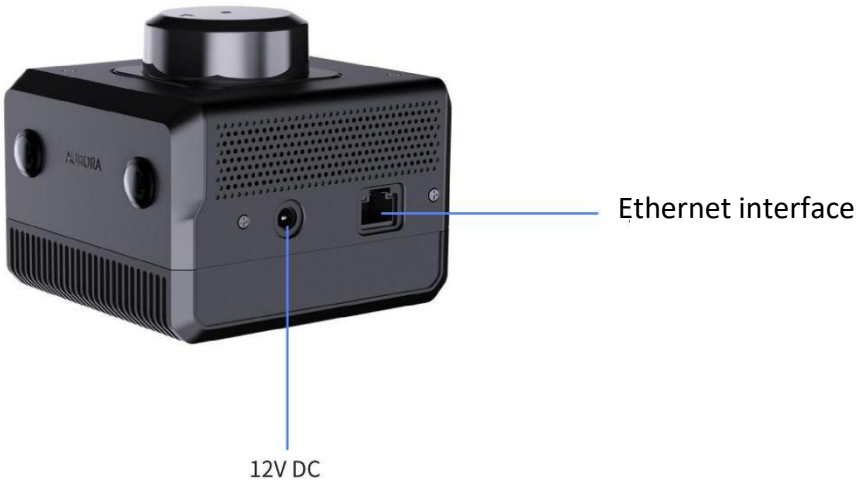

Self-protection and Status Detection

When SLAMTEC Aurora is not working properly, users can get the working status of the system through SDK health data acquisition interface, and try to restart SLAMTEC Aurora to restore work.

SDK and support

In order to facilitate users to use SLAMTEC Aurora for product development and accelerate the development cycle, SLAMTEC provides robot management and development software RoboStudio, which can be graphically debugged through network connection. In addition, SDK development kits that can run on x86 Windows, x86 Linux, arm Linux and other platforms are also provided to users. For specific information, please contact SLAMTEC.

Mechanical Dimensions

The mechanical dimensions of the SLAMTEC Aurora are shown as below:

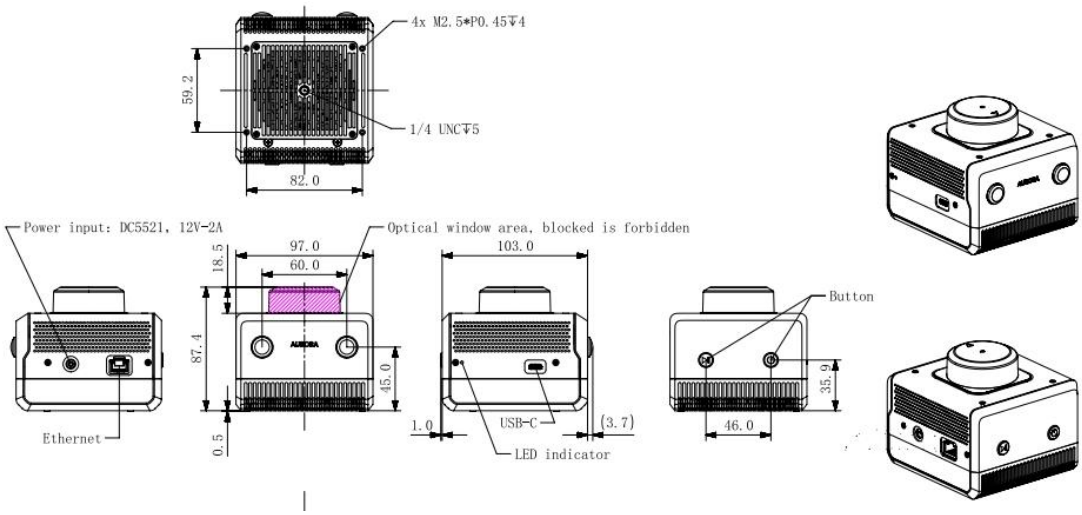

Product List

Item	Quantity	Remarks
Aurora whole machine	1	LIDAR/Binocular Camera/IMU
Handle	1	support frame (optional)
Power adapter	1	5521 interface, 12V, 2A, 1.5m, AC100~240 wide voltage input. (optional)
Battery	1	Optional, 5000mAh, 12V lithium battery, 5521 interface. (Optional)

Quick Start

Preparation work

a. Connect the handle to Aurora and power the device

b. Work immediately after booting up

Operating steps

a. Start RoboStudio Connect Device

b. In the pop-up window, enter the IP 192.168.11.1 in the IP Address bar and click the "Connect" button to connect the device.

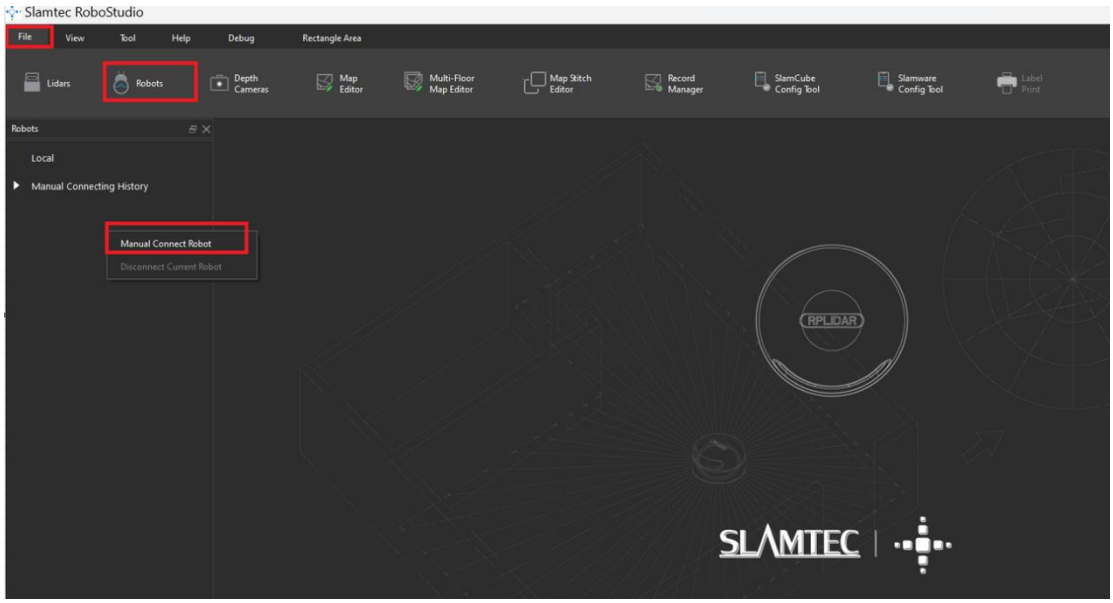

c. Scene strategy switching: Aurora supports three scenario-based configurations.

Scene category	indoor	Large_scale_indoor	outdoor
Scene features	Laser observation is relatively rich, and there are many similar scenes in the environment, which are prone to erroneous closure	The scene is wide, and it is easy to exceed the laser observation range. The overall observation is relatively sparse, and	Open, large scene area, various terrain adaptations exist

	problem scenes	the environment is changeable	
Typical scenario	Office buildings, offices, government centers/medical institutions/hotels, etc	Large parking lots, shopping malls, subway stations, waiting halls, government centers/medical institutions/hotel lobbies with large areas (radar beyond observation range), etc	Typical outdoor scenes, parks, streets, lawns, etc. Some indoor venues, such as circular stadiums and gymnasiums, have a larger overall area

Before starting mapping, use API calls or select appropriate strategies in RoboStudio, and then start mapping testing after the service restarts.

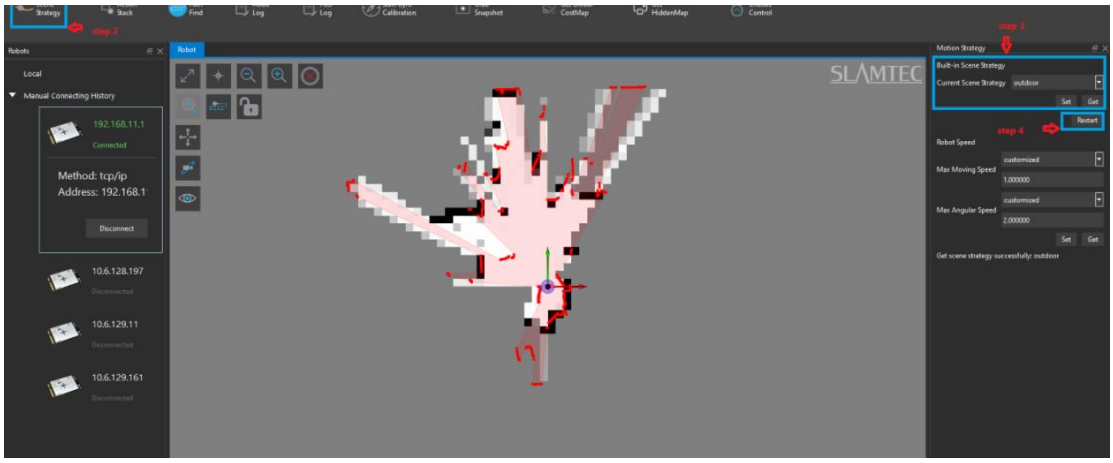

d. Use the aurora_remote to view point cloud, in the pop-up window, enter the IP 192.168.11.1 in the IP Address bar, and then click the "Connect" button to connect the device

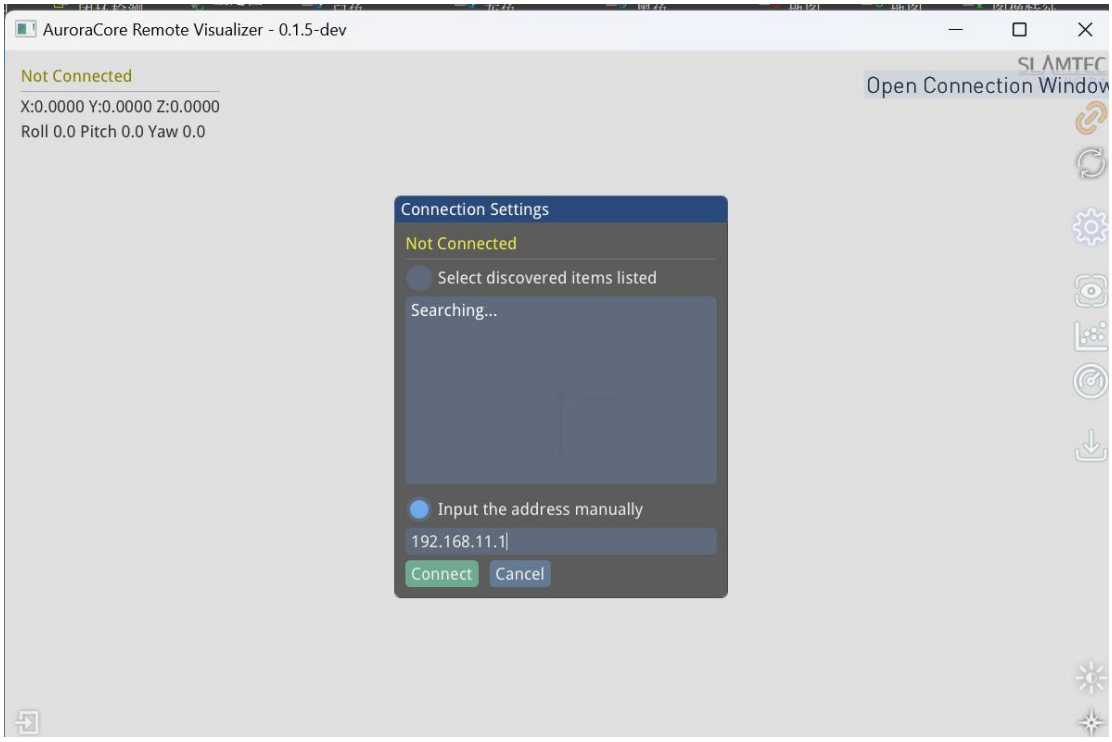

Click "Toggle Frame View" on the right toolbar to display the images and feature points observed by the camera

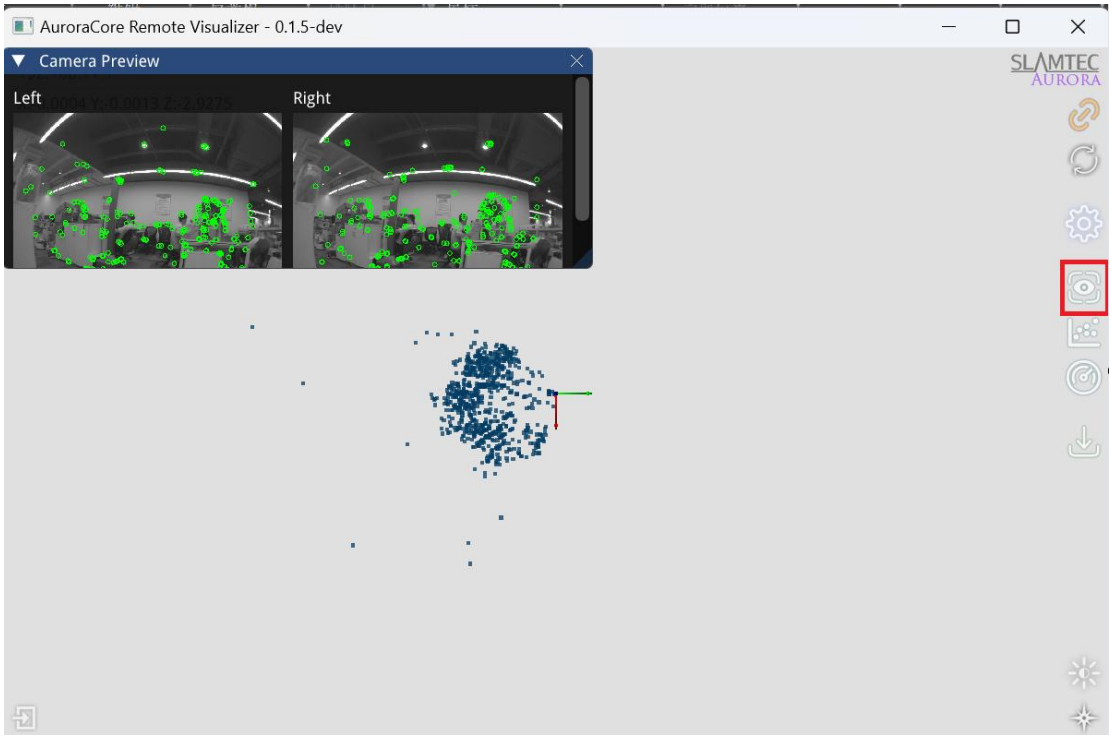

Click "Toggle IMU View" on the right toolbar to dynamically display the angular velocity of the Gyro gyroscope of the current test machine and the linear acceleration in the three axes (X, Y, Z) of the current test machine

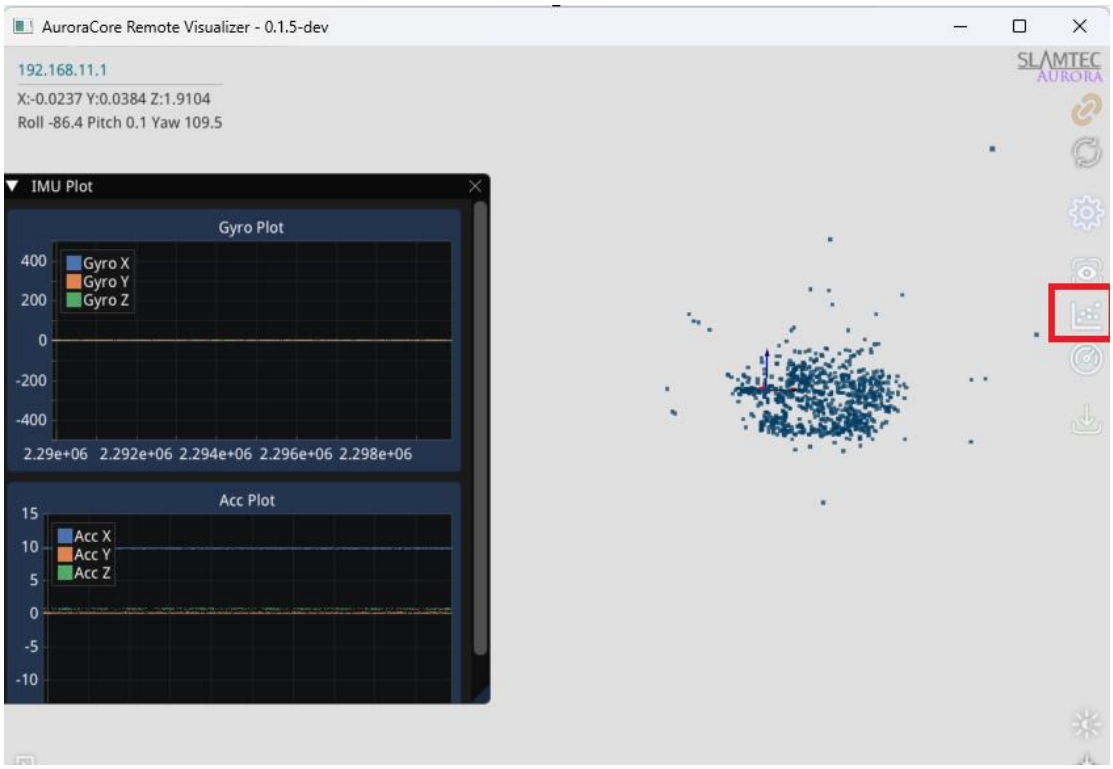

e. Aurora Initialization

After clicking "Clear Map", the system reports that vslam is initializing.

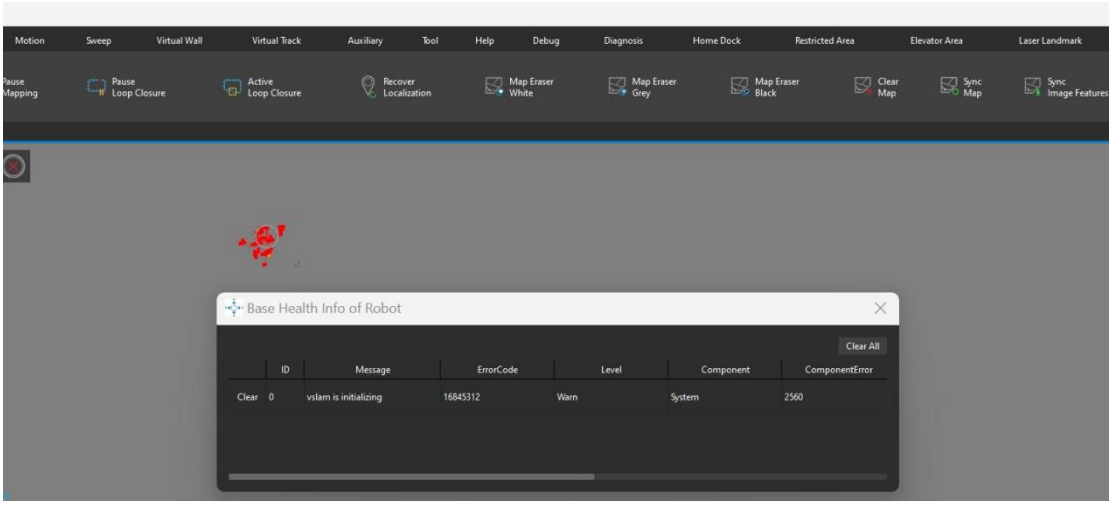

The equipment needs to remain stationary for 3 to 4 seconds during initial operation to complete system initialization. The specific operation recommendations are as follows:

- Find an area with obvious features, face it, hold Aurora in an approximately horizontal state at a distance of 2-3m, and start initializing.
- Keep the handheld device stationary. Continue this operation until the

exclamation mark disappears from the interactive interface. Then, start the formal mapping process, as shown in the figure below.

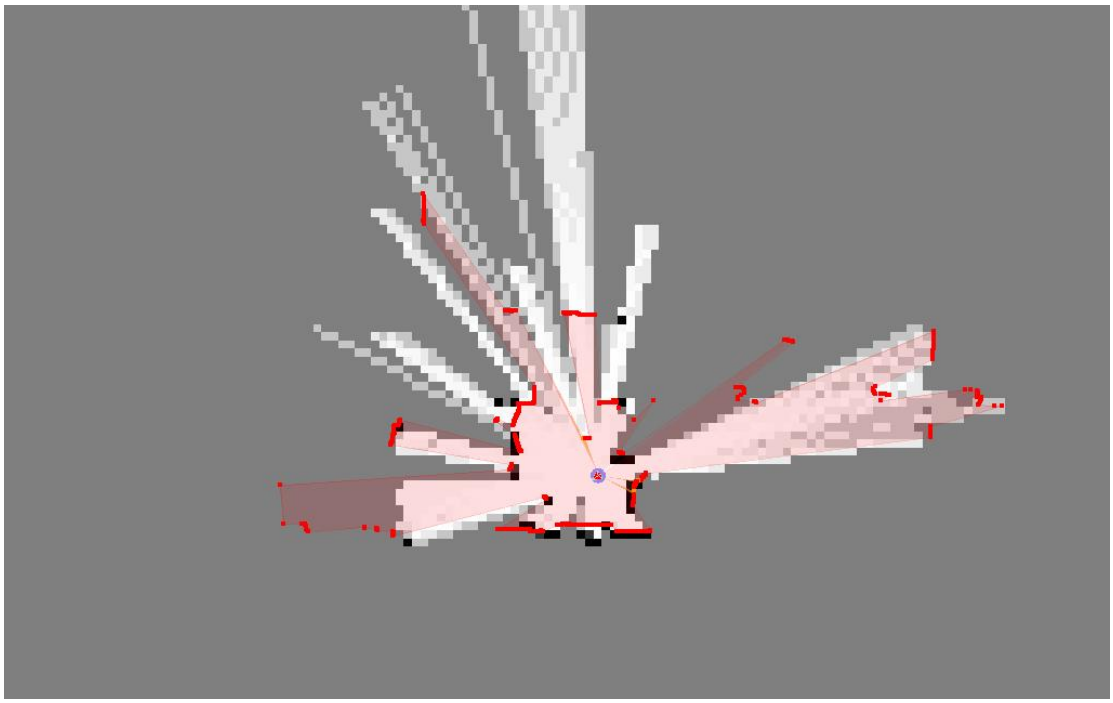

f. Mapping: With a handheld device, you can build an environmental map by walking at normal speed.

Revision History

Date	Version	Description
2024-09-28	1.0	Initial Version